Product Information Packet

Model AHP-470XEHC

Nema-4, Solid State Heat/Cool Air Conditioner

Without Temperature Control

Part #0-F095-5-001

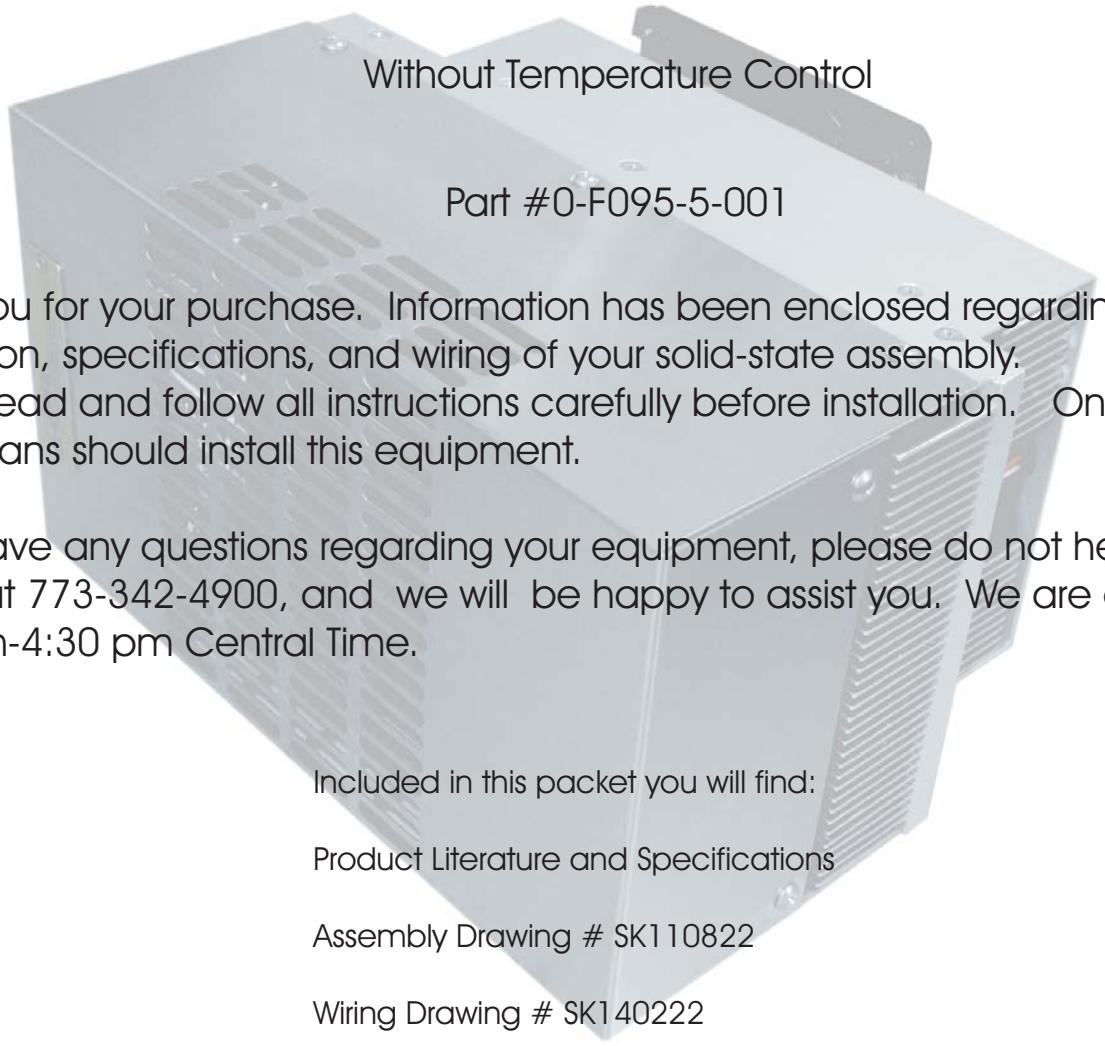

Thank you for your purchase. Information has been enclosed regarding the installation, specifications, and wiring of your solid-state assembly. Please read and follow all instructions carefully before installation. Only qualified technicians should install this equipment.

If you have any questions regarding your equipment, please do not hesitate to call us at 773-342-4900, and we will be happy to assist you. We are open from 8:00 am-4:30 pm Central Time.

Included in this packet you will find:

Product Literature and Specifications

Assembly Drawing # SK110822

Wiring Drawing # SK140222

Installation Drawing # SK110823

Warranty Information

teca

ThermoElectric Cooling America Corporation
4048 W. Schubert Avenue • Chicago, IL (U.S.A.) 60639
Ph: 773/342-4900 Fx: 773/342-0191
sales@thermoelectric.com www.thermoelectric.com

Important Installation Notes for Air

Mounting Styles:

Both 'thru mount' and 'flush mount' units can be positioned in any orientation and on any enclosure surface. It is important to consider interior air flow patterns when determining the mounting location. Also of importance is an unrestricted flow of ambient air thru the hot side heat exchanger. Ease of access and inspection must be considered for those applications in particularly severe environments which may require occasional maintenance.

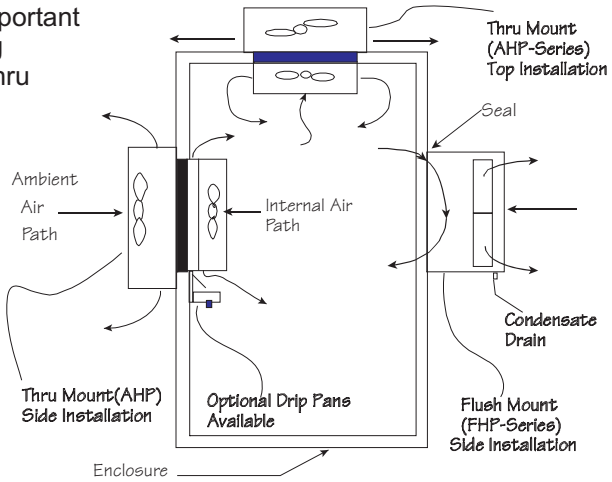

Vertical (Side/Front/Back) Mounting:

Vertical mounting refers to the vertical direction of the cold side or interior fins and is recommended for applications with high humidity, poor and incomplete cabinet seals or any condition which may cause the cold side fins to be maintained at temperatures below the dew point for long periods of time allowing for the formation of condensation. The vertical fin direction provides a drip path whereupon condensation can be collected via a moisture removal system (standard on FHP-units) or a drip pan positioned below the cold side fins. Drip pans are optional for thru mount units.

Condensate Removal System:

All FHP-Series and AHP-1400 air conditioners contain a built-in condensate removal system. The condensate kit consists of a antifungal sponge with a condensate wick. PVC tubing is also provided for drainage. Drip pans are optional for thru mount units which must be evaluated on an individual basis. Equations defining a relationship between the cold side fin and enclosure temperatures are provided to assist in the evaluation.

Top Mounting:

Though often the easiest location to mount it is often the most difficult to protect from condensation in this orientation due to the fin orientation, gravity and any susceptible components below. If a drip pan is employed by the end user use caution to place the pan far enough away from the internal fan to minimize the restriction of air flow. The pan should cover the fin ends as well as the fan area. When there is a choice, the vertical orientation is preferred by most users.

Maintenance:

Since the technology is solid-state, there are no filters, compressors, or fluorocarbons to maintain. The only moving parts are the fans. It is recommended for harsh or dirty environments that the heat sinks be cleaned from time to time. This can be accomplished by directing compressed air over the external fins or on NEMA 4 versions by hosing the unit down. This will increase the overall life and performance of the system.

Cautions:

Take care when mounting not to damage the seal between the hot and cold side sinks. Do not attempt to mount a unit to a warped surface or try to make the units mounting surface conform to an unflat surface. Do not pinch or damage any leads when mounting. Do not over tighten any installation screw, use reasonable force. Always mount with any condensate drain down. Do not compress the cold side between the hot side and any other surface. Do not obstruct the airflow on either side. When mounting consider the natural air flows of the enclosure. Connect power only after the installation is complete.

Notes on condensation:

Condensation occurs at the cold side fins when the surface temperature goes below the dew point. To reduce or remove condensate, consider the following:

- Regulate the Fin Temperature above the Dewpoint.
- Keep Enclosure Closed and Sealed from Outside Humidity.
- Use Desiccant (Moisture absorbing Granules.)
- Employ Condensate Removal System/Drip Pans.

If you have any questions regarding your installation, Please feel free to contact our technical department for assistance at 773-342-4900.

AHP-470 | Air Conditioner/Heat Exchanger

Air Cooled
Through Mounted
Nema-12, 4, 4X

24 VDC
315 BTU/HR



FEATURES

- Compact (only 10" X 5.84" X 7.75")
- Mounts and operates in any orientation: horizontal, vertical, etc.
- Low vibration and noise
- No moving parts except fans
- Environmentally safe
- No compressor, fluorocarbons or filters
- Virtually maintenance-free operation
- Stainless steel exterior housing
- Efficient heat exchanger mode (ECO-Mode)
- Weight 14 LBS.

CONTROL TEMPERATURES

Active Cooling	35 °C
Heat Exchanger (ECO-Mode)	25 °C
Active Heating	10 °C
Typical Hysteresis	5 °C
Operating Ambient	-40/+70 °C
Operating Enclosure	-10/+60 °C

POWER INPUTS

Voltage	24 VDC
Current, Active	7.0 AMPS
Current, ECO-Mode	0.3 AMPS

PERFORMANCE RATINGS

Cooling (Traditional)	315 BTU/HR
Cooling (Din 3168)	95 WATTS
Cooling COP (at L35 L35)	056
Heating (Traditional)	> 572 BTU/HR
Heating (Din 3168)	> 168 WATTS
Heating COP	> 1.0

INCLUDES

- Temperature controller
- Mounting gasket
- Mounting hardware
- Power input leads
- Power saving heat exchanger mode (ECO-Mode)

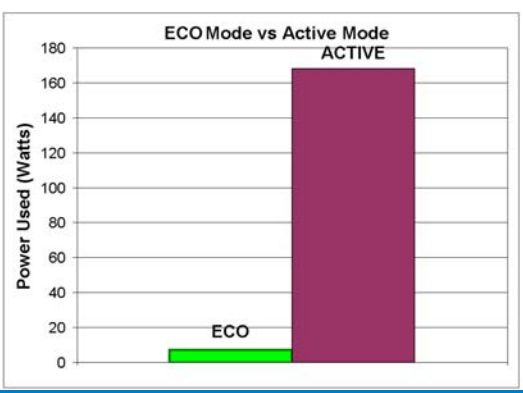

CONFIGURATIONS

MODEL	PART NUMBER	NOTES	TEMPERATURE CONTROL	ENVIRONMENT
AHP-470	0-F0J5-0-001	Cool only, industrial fans	TC-4F	NEMA-12, IP 52
AHP-470HC	0-F095-1-001	Heat/Cool, industrial fans	None*	NEMA-12, IP 52
AHP-470HC	0-F0I5-1-001	Heat/Cool, industrial fans	TC-7F	NEMA-12, IP 52
AHP-470XE	0-F0J5-4-001	Cool only, sealed hot side fan	TC-4F	NEMA-4, IP 56
AHP-470XEHC	0-F095-5-001	Heat/Cool, sealed hot side fan	None*	NEMA-4, IP 56
AHP-470XEHC	0-F0I5-5-001	Heat/Cool, sealed hot side fan	TC-7F	NEMA-4, IP 56
AHP-470X	0-F0J5-2-001	Cool only, Mil. grade hot side fan	TC-4F	NEMA-4X, IP 56
AHP-470XHC	0-F095-3-001	Heat/Cool, Mil. grade hot side fan	None*	NEMA-4X, IP 56
AHP-470XHC	0-F0I5-3-001	Heat/Cool, Mil. grade hot side fan	TC-7F	NEMA-4X, IP 56
AHP-470XM	0-F0J5-2-011	Cool only, Mil. grade fans	TC-4F	NEMA-4X, IP 56
AHP-470XMHC	0-F095-3-011	Heat/Cool, Mil. grade fans	None*	NEMA-4X, IP 56
AHP-470XMHC	0-F0I5-3-011	Heat/Cool, Mil. grade fans	TC-7F	NEMA-4X, IP 56

* For controller options contact TECA; Heating function via reverse polarity (controller dependent)

AHP-470

MOUNTING STYLE

Through Mounted

ENVIRONMENTS SERVED

NEMA-12 IP 52

NEMA-4,4X IP 56

RATING (TRADITIONAL)

AHP-470 315 BTU/hr @ 0 °F ΔT

405 BTU/hr @ +20 °F ΔT

RATING (DIN 3168)

AHP-470 95 Watts L35 L35

62 Watts L35 L50

PERFORMANCE CURVE

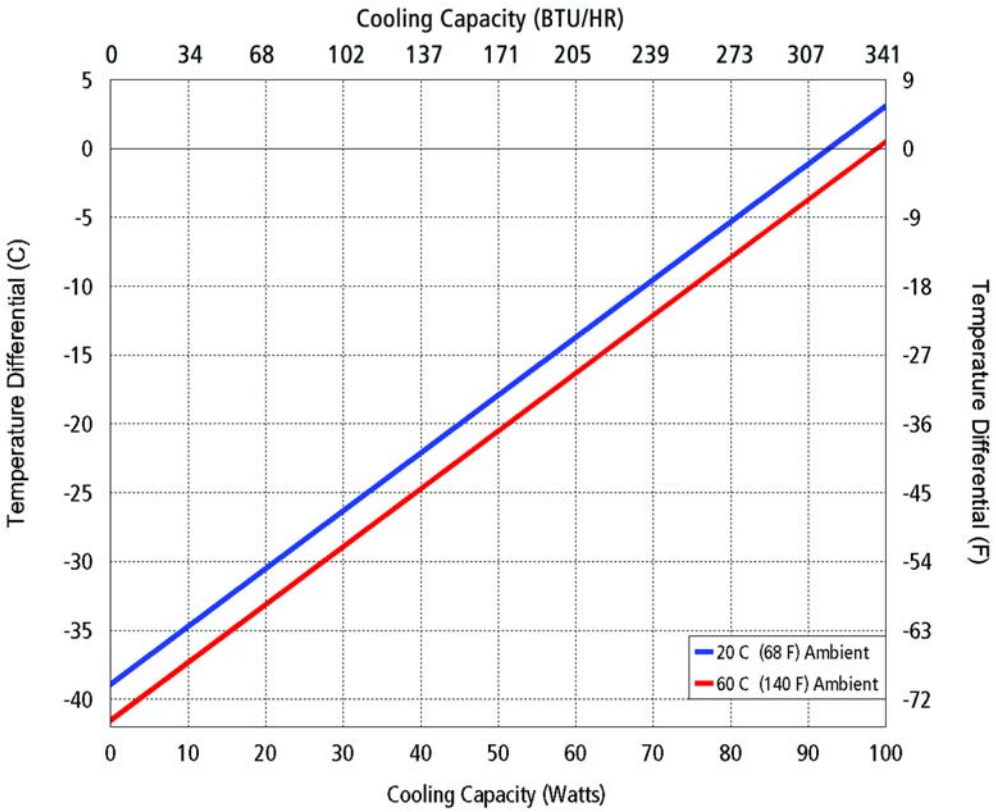

Equation of Line: y=ΔT(°C) x=Capacity (Watts)		
Ambient Temp	**20°C**	**60°C**
AHP-470	y=.42x-38.9	y=.42x-41.5

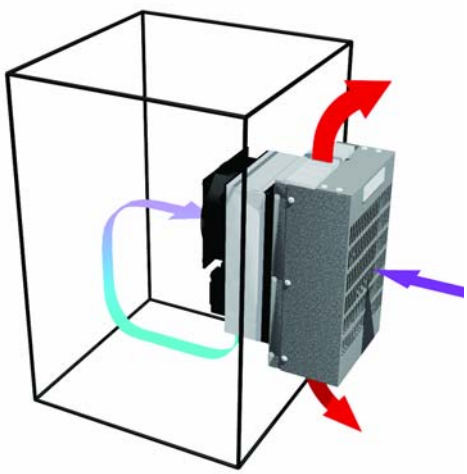

Air Flow Pattern

DIMENSIONS

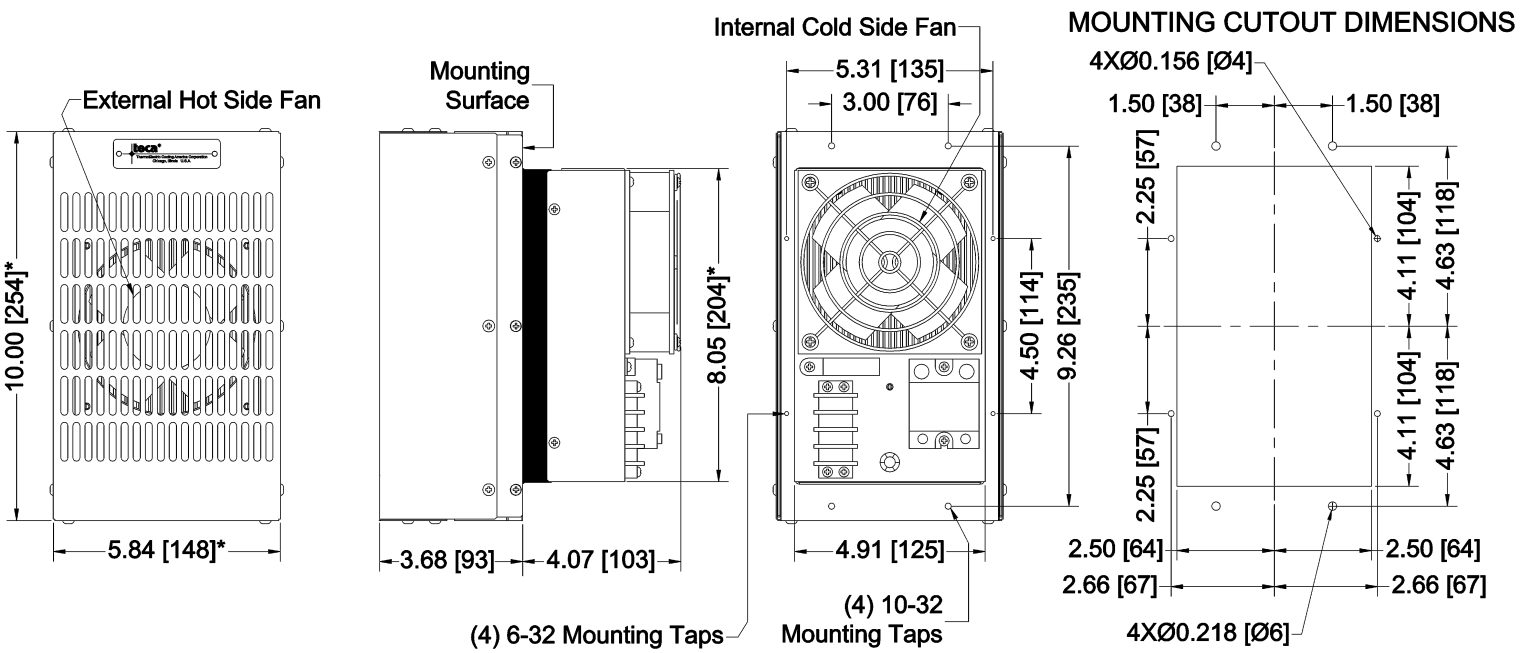

* Dimension does not include hardware and sealant.
Mounting hardware and gasket included but not shown.
Dimensions: Inches [Millimeters]

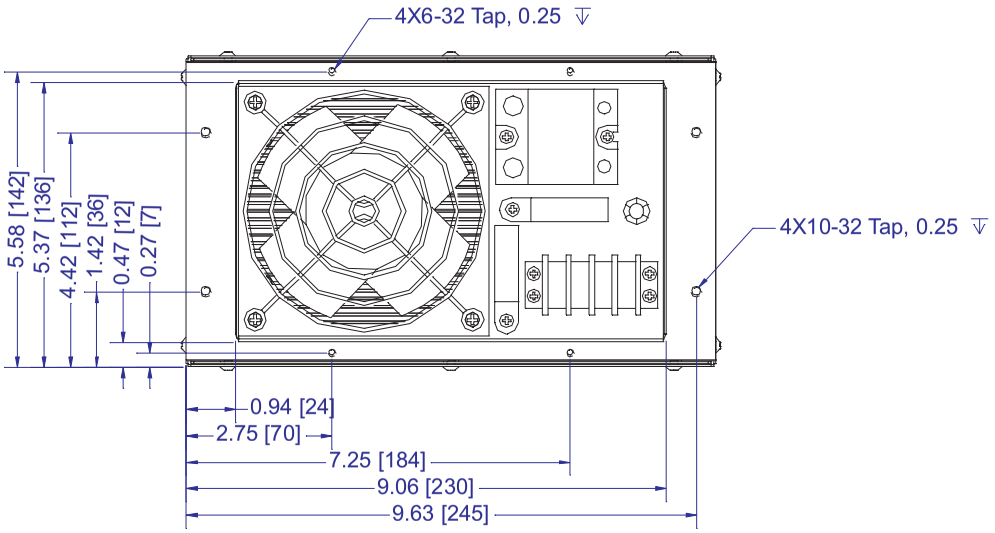

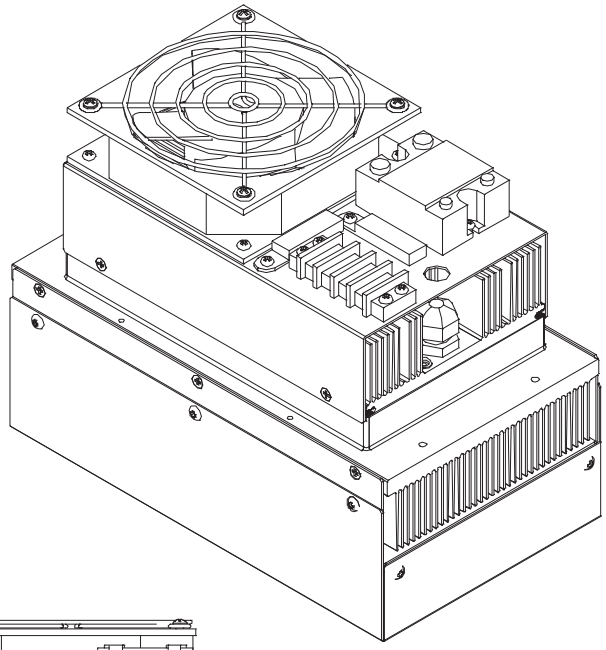

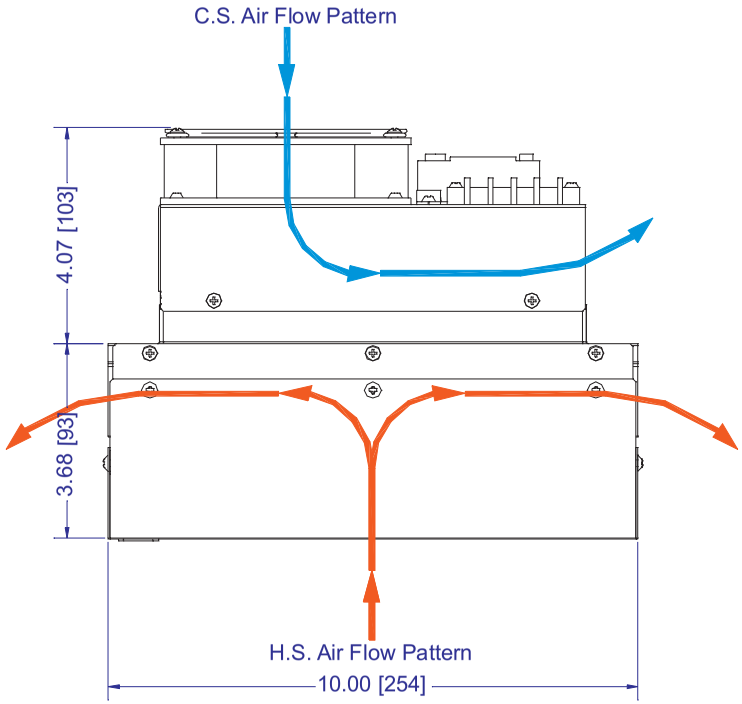

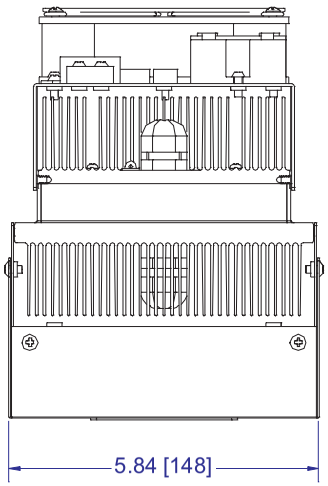

REV	DESCRIPTION	Date	APPROVED

INFORMATION DISCLOSED HEREIN IS THE CONFIDENTIAL PROPERTY OF TECA CORP. RECIPIENT SHALL NOT USE THE INFORMATION IN ANY UNAUTHORIZED MANNER.

UNLESS OTHERWISE SPECIFIED
DIMENSIONS ARE IN INCHES
TOLERANCES ARE:

DECIMALS	ANGLE
.XX +/-	+/-
.XXX +/-	FRACTION +/-

FINISH:

MATERIAL:

THERMOELECTRIC COOLING AMERICA CORP.

AHP-400 / AHP-500
ASSEMBLY

DRAWN BY: AA	DRAWING # SK110822		REV LEVEL
DATE: 08/08/2011			
D8167	SCALE	MASTER: SK110821	SHEET

Alternate Wiring

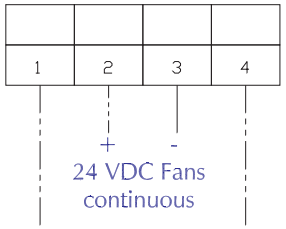

24 VDC Fans
continuous

+/- 24 VDC TE -/+
(PWM control)
remove bridge rectifier from the circuit

BOTH FANS ON CONTINUOUSLY

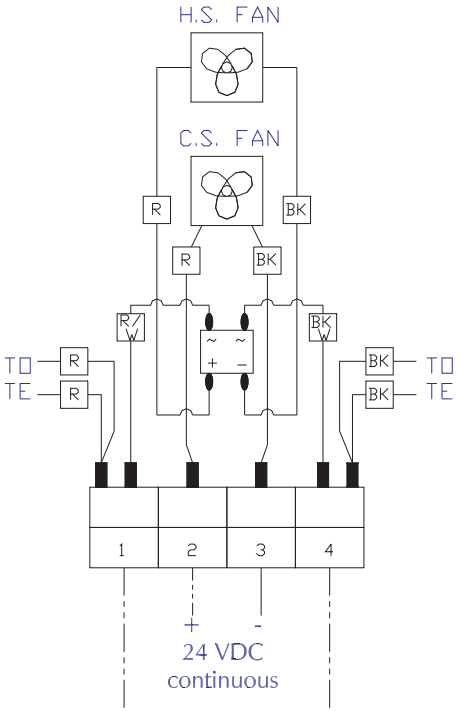

24 VDC
continuous

+/- 24 VDC TE -/+
(non PWM control)

H.S. FAN CYCLES WITH TE

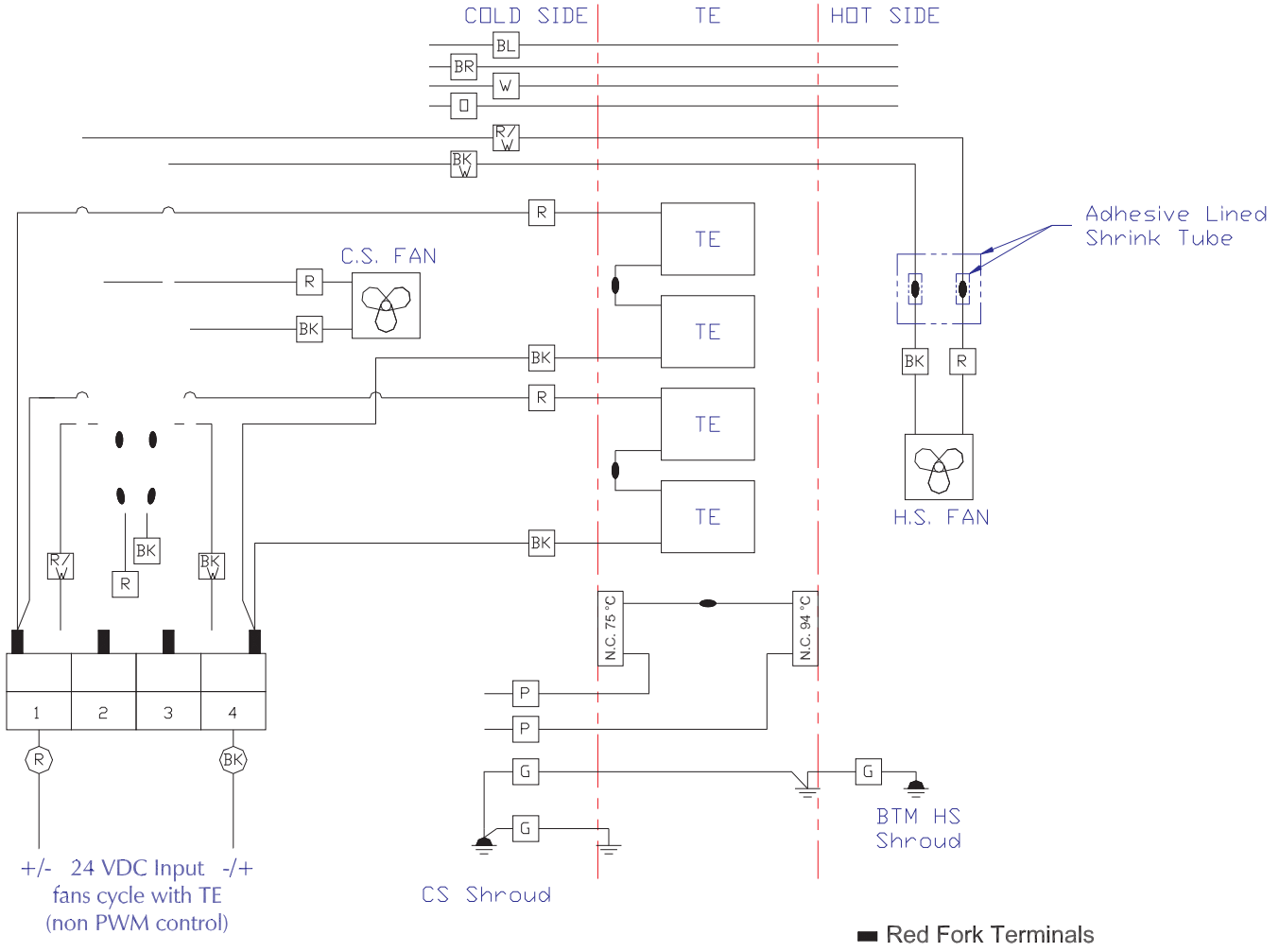

+/- 24 VDC Input -/+
fans cycle with TE
(non PWM control)

Factory Default Wiring

- Red Fork Terminals
- Blue Fork Terminals
- Red Ring Terminals
- Blue Ring Terminals
- Solder & Shrink Tube Connection

- 22 AWG Wires
- 18 AWG Wires

REV	DESCRIPTION	Date	APPROVED

INFORMATION DISCLOSED HEREIN IS THE CONFIDENTIAL PROPERTY OF TECA CORP. RECIPIENT SHALL NOT USE THE INFORMATION IN ANY UNAUTHORIZED MANNER.

UNLESS OTHERWISE SPECIFIED
DIMENSIONS ARE IN INCHES
TOLERANCES ARE:

DECIMALS	ANGLE
.XX +/-	+/-
.XXX+/-	FRACTION +/-

FINISH:

MATERIAL:

THERMOELECTRIC COOLING AMERICA CORP.

AHP-470XEHC WITHOUT CONTROL
WIRING DIAGRAM
REVERSE POLARITY CAPABLE

DRAWN BY: AA
DATE: 02/24/2014
D9036

DRAWING # SK140222

REV LEVEL

SCALE

MASTER: SK110114

SHEET

Mounting, Monture, Montage, Montaggio

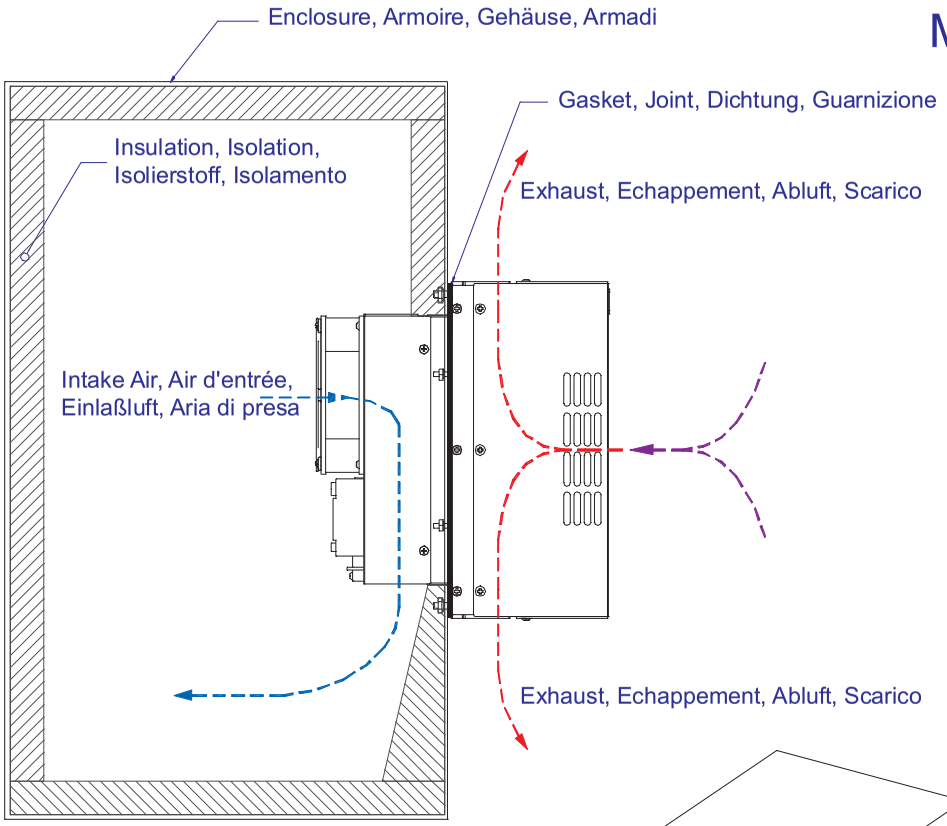

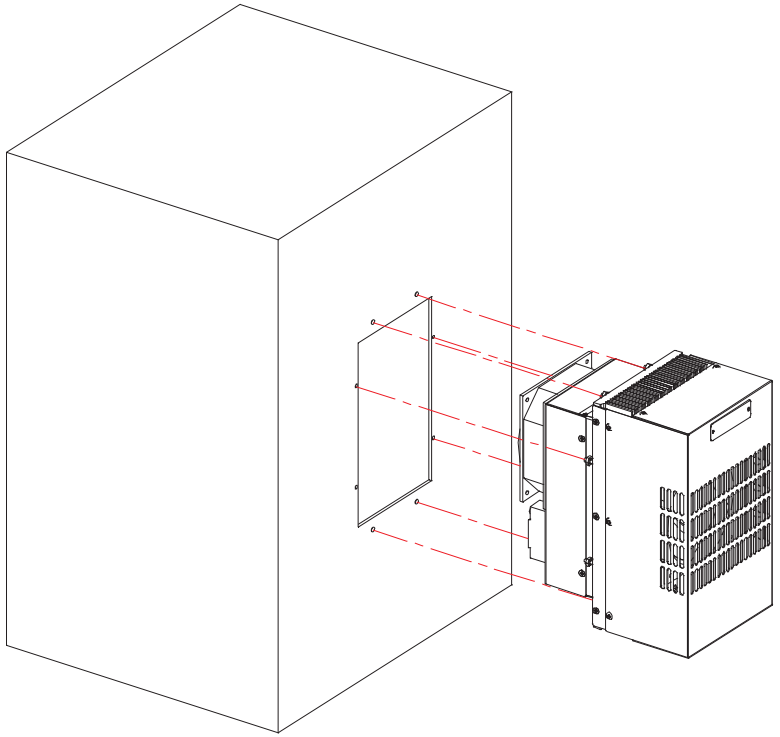

MOUNTING CUTOUT DIMENSIONS

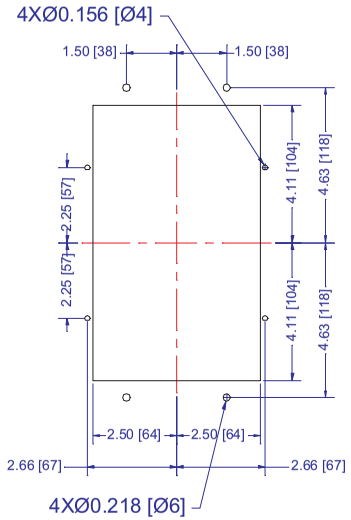

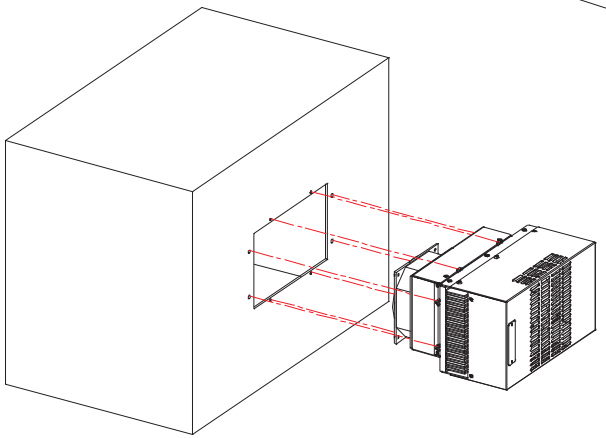

Alternate, Alternative, Alternative, Alternativa

English, Français, Deutsch, Italiano
Dimensions: Inches [Millimeters]

REV	DESCRIPTION	Date	APPROVED

INFORMATION DISCLOSED HEREIN IS THE CONFIDENTIAL PROPERTY OF TECA CORP. RECIPIENT SHALL NOT USE THE INFORMATION IN ANY UNAUTHORIZED MANNER.

UNLESS OTHERWISE SPECIFIED DIMENSIONS ARE IN INCHES
TOLERANCES ARE:

DECIMALS	ANGLE
.XX +/-	+/-
.XXX+/-	FRACTION +/-

FINISH:

MATERIAL:

THERMOELECTRIC COOLING AMERICA CORP.

AHP-400 / AHP-500
TYPICAL FIELD MOUNTING

DRAWN BY:	DRAWING #	REV LEVEL
AA	SK110823	
DATE: 08/08/2011		
D8169	SCALE	MASTER: SK110821 / SHEET

LIMITED WARRANTY

In the event a defect in material or workmanship is discovered in any of TECA's products within one year after the date they are delivered to Buyer, and if: (a) TECA is notified of the defect in writing by certified mail within 14 days of the date of discovery; (b) TECA may then either, at its sole discretion, inspect the product at Buyer's location, or require that the product be made available at Buyer's expense at TECA's premises for TECA's inspection within 14 days of the date of notification; and (c) the products are defective and the defects result from faulty materials and/or workmanship and not in any way from accident, misuse, misapplication, mishandling, modification, or alteration by the Buyer or the shipper, then TECA shall, at its sole option, repair or exchange defective products free of charge to Buyer, or credit to buyer the price of the defective products. ALL OTHER WARRANTIES, EXPRESS OR IMPLIED, ARE EXCLUDED, INCLUDING BUT NOT LIMITED TO THE IMPLIED WARRANTIES OF MERCHANTABILITY AND FITNESS FOR A PARTICULAR PURPOSE. IN NO EVENT SHALL TECA BE LIABLE FOR ANY CLAIM BASED UPON BREACH OF EXPRESS OR IMPLIED WARRANTY OR ANY OTHER DAMAGES WHETHER SPECIAL, INDIRECT, INCIDENTAL, CONSEQUENTIAL, LOST PROFITS, BUSINESS INTERRUPTION, OR LOSS OF BUSINESS OR CUSTOMER RELATIONSHIPS.

RETURNED GOODS, RESTOCKING CHARGES

In order to return merchandise for any reason (repair, replacement, or credit) a return authorization number must be issued by TECA. New merchandise may not be returned for credit beyond 60 days from shipment. Charges for incidental or other damages may also be made. All returned goods must be sent freight prepaid. A restocking charge of 15% will apply. On special equipment and custom modified equipment orders, additional incremental cancellation charges may be made.